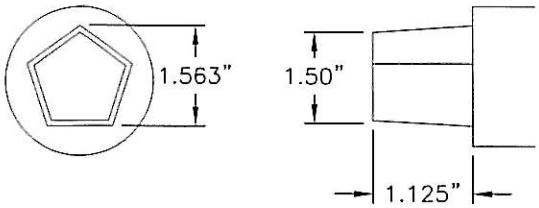

1 ½" OPERATING NUT

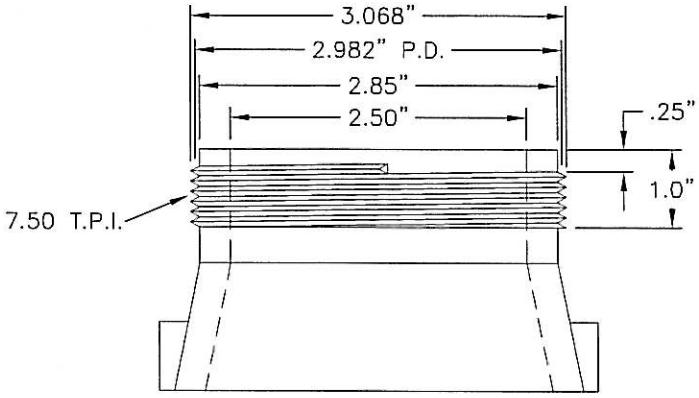

2 ½" HOSE NOZZLE
(NATIONAL STANDARD)

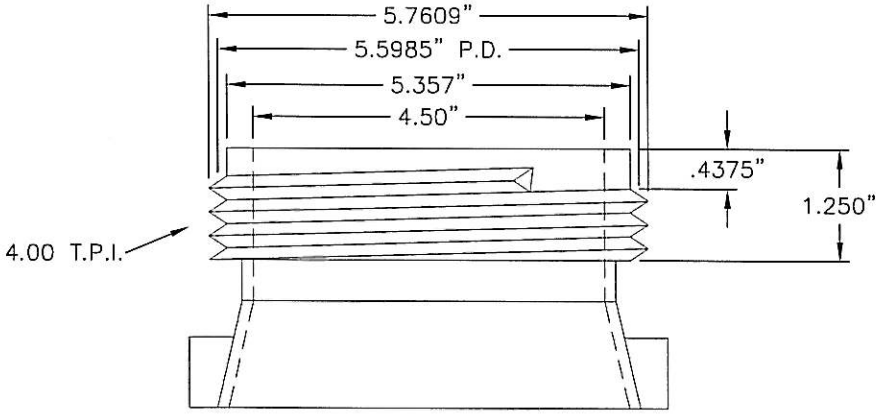

4 ½" PUMPER OUTLET (STEAMER) NOZZLE
(NATIONAL STANDARD)

CITY OF LEBANON
It's easier from here.

CITY of LEBANON SUPPLEMENTAL DRAWING

APPROVED

CITY ENGINEER

FIRE HYDRANT NUT & NOZZLE DETAIL

DATE:	DRAWING NO:
Jan. 2009	01100-14