HORIZONTAL THRUST BLOCK BEARING AREA (S.F.)									(VERTICAL DOWN) THRUST BLOCK VOLUME (C.Y.)			
FITTING SIZE	TEE, WYE, DEAD END AND HYDRANT (SEE NOTE 7)	STRADDLE BLOCK	90° BEND PLUGGED CROSS	TEE PLUGGED ON RUN		45° BEND	22½° BEND	11¼° BEND	90° BEND	45° BEND	22½° BEND	11¼° BEND
				A–1	A–2							
6"	2.1	3.2	3.0	4.2	3.0	1.6	RG*	RG*	1.5	RG*	RG*	RG*
8"	3.8	5.7	5.3	7.6	5.3	2.9	1.5	RG*	2.6	1.4	RG*	RG*
12"	8.5	12.8	12.0	17.0	12.0	6.5	3.3	1.7	5.9	3.2	1.6	RG*
16"	15.1	22.7	21.3	30.2	21.3	11.6	5.9	3.0	10.5	5.7	2.9	1.5

BEARING AREAS BASED ON STANDARD TEST PRESSURE OF 150 P.S.I. AND ASSUMED ALLOWABLE SOIL BEARING STRESS OF 2000 P.S.F. COMPUTE BEARING AREAS FOR DIFFERENT SOIL BEARING STRESSES BY USING THE EQUATION: AREA=(2000/SOIL BEARING STRESS)x(TABLE VALUE).

VOLUMES BASED ON STD. TEST PRESSURE (150 P.S.I.) AND WEIGHT OF CONCRETE.

*RG = MEG–A–LUG RETAINER OR APPROVED EQUAL.

THRUST BLOCK WIDTH TO HEIGHT RATIO
THRUST BLOCK HEIGHT (H) PIPE DIAMETER < H < 1/2 TRENCH DEPTH
THRUST BLOCK WIDTH (B): H < B < 2H

RODS FOR VERTICAL DOWN BENDS		
FITTING SIZE	ROD SIZE	EMBEDMENT
6"	#4	24"
8" AND 12"	#6	30"
16"	#8	36"

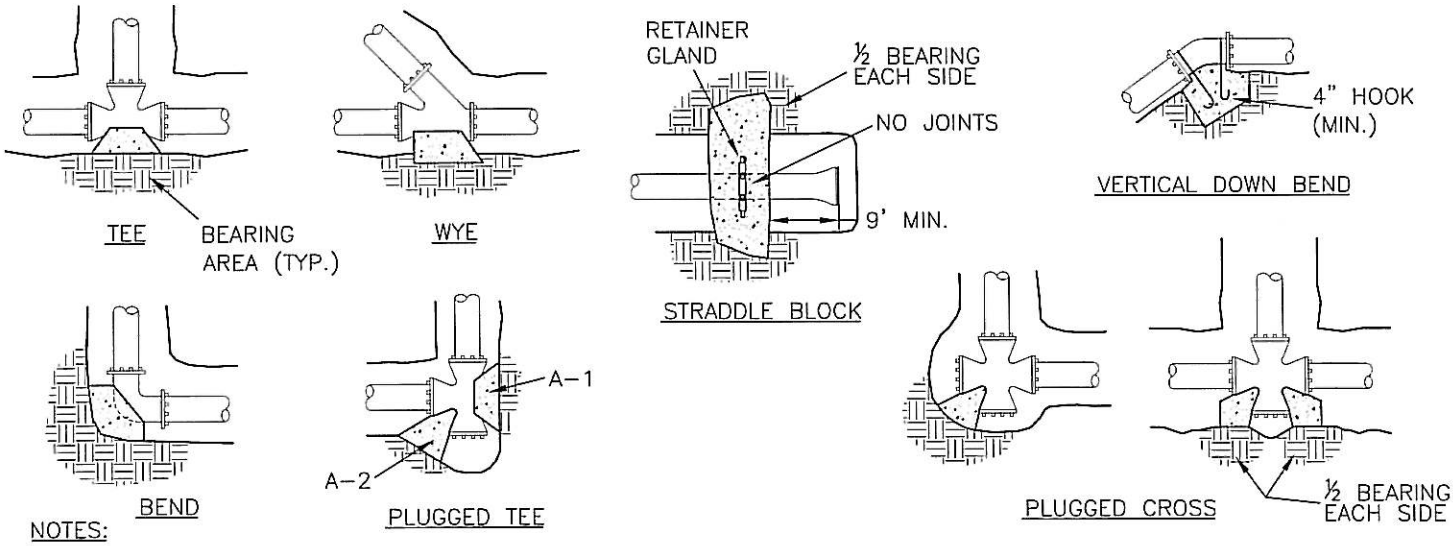

NOTES:

1. ALL THRUST BLOCKING MUST BE POURED AGAINST UNDISTURBED EARTH AND HAVE A 28 DAY COMPRESSIVE STRENGTH OF 3000 P.S.I.
2. CONCRETE SHALL BE KEPT CLEAR OF ALL JOINTS AND ACCESSORIES. INSTALL ISOLATION MATERIAL BETWEEN PIPES AND/OR FITTINGS BEFORE POURING THRUST BLOCKS.
3. TIE RODS SHALL BE DEFORMED GALVANIZED COLD–ROLLED STEEL (MIN. 40,000 P.S.I. TENSILE STRENGTH). EPOXY COATED BARS MAY BE USED IN LIEU OF GALVANIZED PROVIDED EPOXY COATING IS APPLIED AFTER FABRICATION.
4. MEG–A–LUG SYSTEM (OR APPROVED EQUAL) MAY BE USED ON ALL M.J. FITTINGS IN PLACE OF THRUST BLOCKING.
5. ALL THRUST BLOCKING (EXCEPT VERTICAL DOWN) MUST MEET THE WIDTH–TO–HEIGHT RATIO SHOWN ABOVE.
6. SEE TABLE IN SECTION 01140–44 OF THE CITY SUPPLEMENTAL STANDARD SPECIFICATIONS FOR RESTRAINT REQUIREMENTS.

CITY OF LEBANON
It's easier from here.

CITY of LEBANON SUPPLEMENTAL DRAWING

APPROVED

CITY ENGINEER

THRUST BLOCKING

DATE: Jan. 2009

DRAWING NO: 01100-04