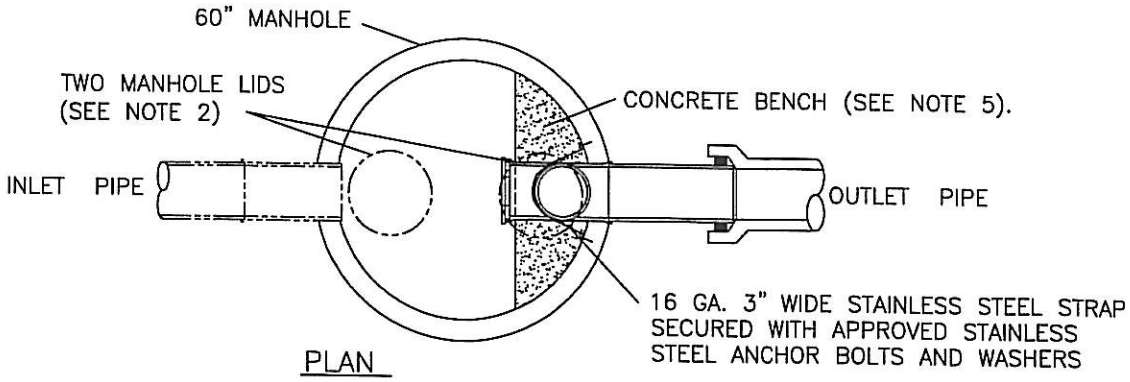

PLAN

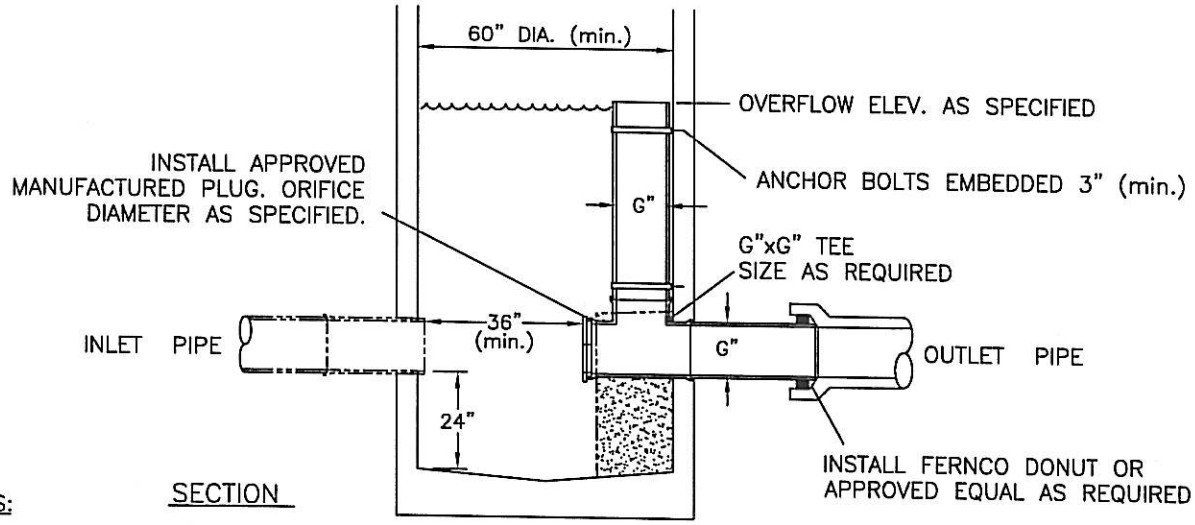

SECTION

NOTES:

1. SEE STD DWG 00400–15 FOR DETAILS
2. MINIMUM MANHOLE DIAMETER IS 60". PROVIDE A PRECAST FLAT TOP MANHOLE LID WITH TWO ACCESS OPENINGS FOR FRAMES AND COVERS. ONE OPENING OVER THE OVERFLOW STAND PIPE, THE OTHER OVER THE LADDER RUNGS ON THE OPPOSITE SIDE.
3. 36" OF CLEARANCE MUST BE PROVIDED BETWEEN THE MECHANICAL PLUG/ORIFICE AND THE OPPOSITE MANHOLE WALL OR INLET PIPE.
4. USE APPROVED FASTENERS FOR STAINLESS STEEL STRAPS. STRAP ANCHORS MUST BE EMBEDDED 3" MIN.
5. PROVIDE A CONCRETE BENCH LEVEL WITH THE TOP OF THE OUTLET PIPE AND FINISHED AS PER STD DWG 00400–18.

CITY OF LEBANON
It's easier from here.

CITY of LEBANON SUPPLEMENTAL DRAWING

APPROVED

CITY ENGINEER

FLOW CONTROL MANHOLE DETAIL

DATE: Jan. 2009

DRAWING NO: 00400-27