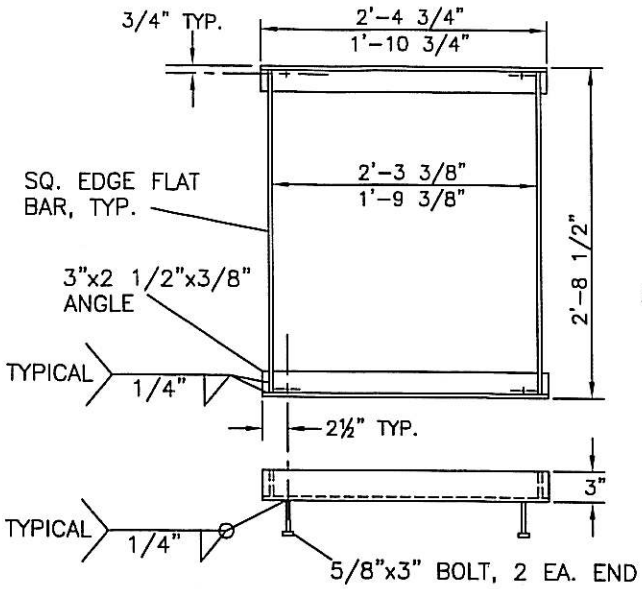

CATCH BASIN FRAME
TYPE 1 & TYPE 2 GRATES

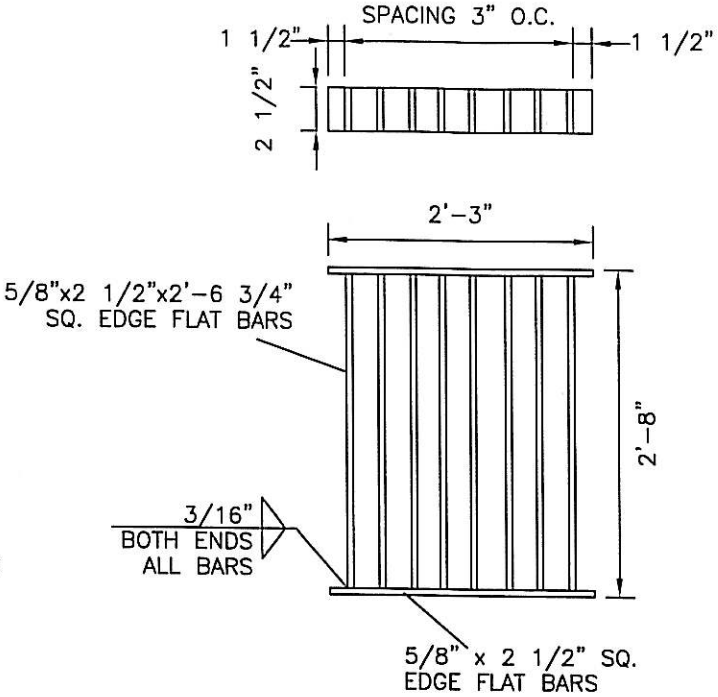

GRATE – TYPE 1

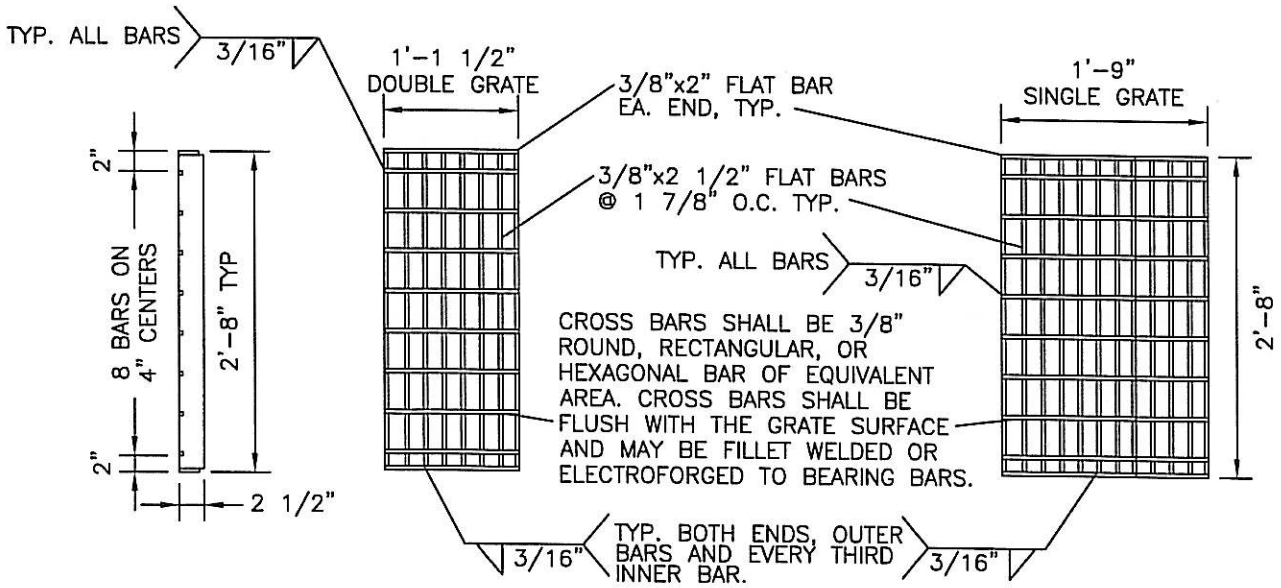

GRATE – TYPE 2

CITY OF LEBANON
It's easier from here.

CITY of LEBANON SUPPLEMENTAL DRAWING

APPROVED

CITY ENGINEER

CATCH BASIN FRAME AND GRATE DETAILS

DATE:	DRAWING NO:
Jan. 2009	00400-09