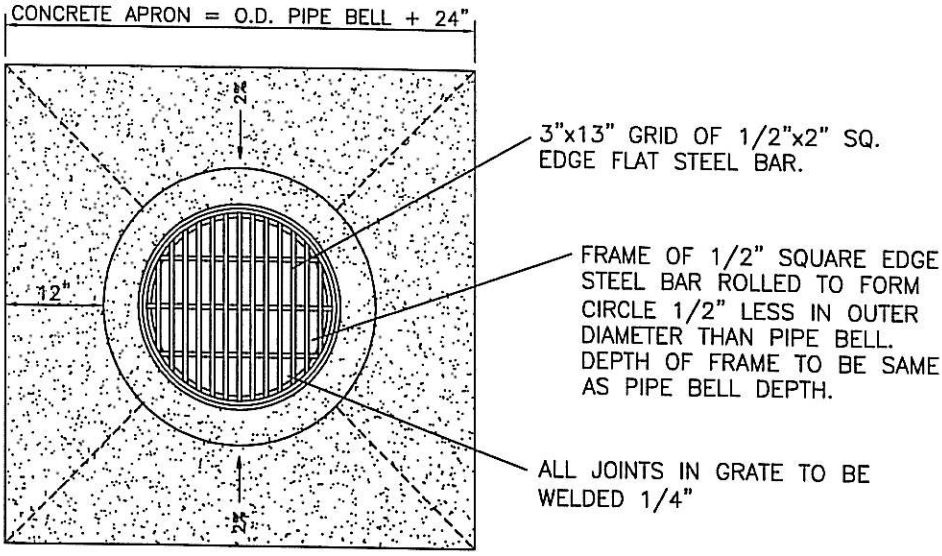

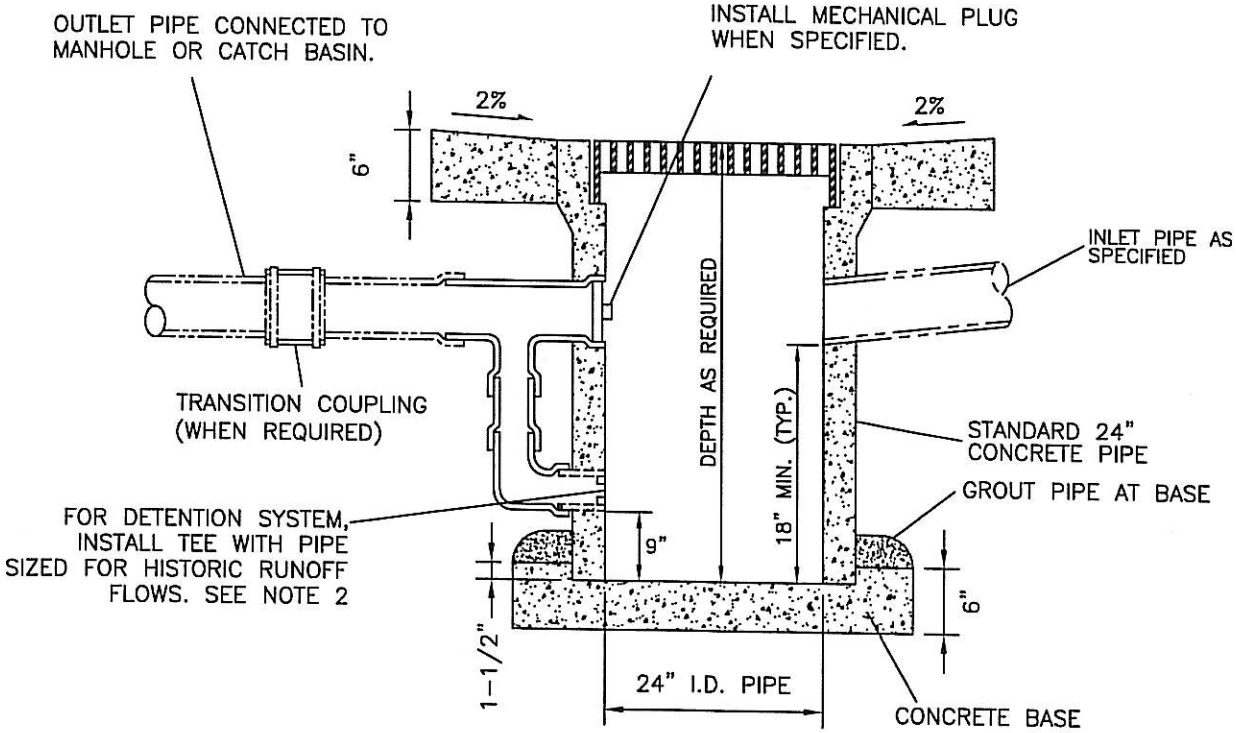

NOTES:

1. ALL CONCRETE SHALL BE COMMERCIAL GRADE CONCRETE.
2. RUNOFF DETENTION REQUIRED ON PRIVATE INLETS CONNECTED DIRECTLY TO THE CITY STORM DRAINAGE SYSTEM.

CITY OF LEBANON
It's easier from here.

CITY of LEBANON SUPPLEMENTAL DRAWING

APPROVED

CITY ENGINEER

AREA DRAINAGE BASIN FOR NON TRAFFIC AREAS

DATE:	DRAWING NO:
Jan. 2009	00400-07