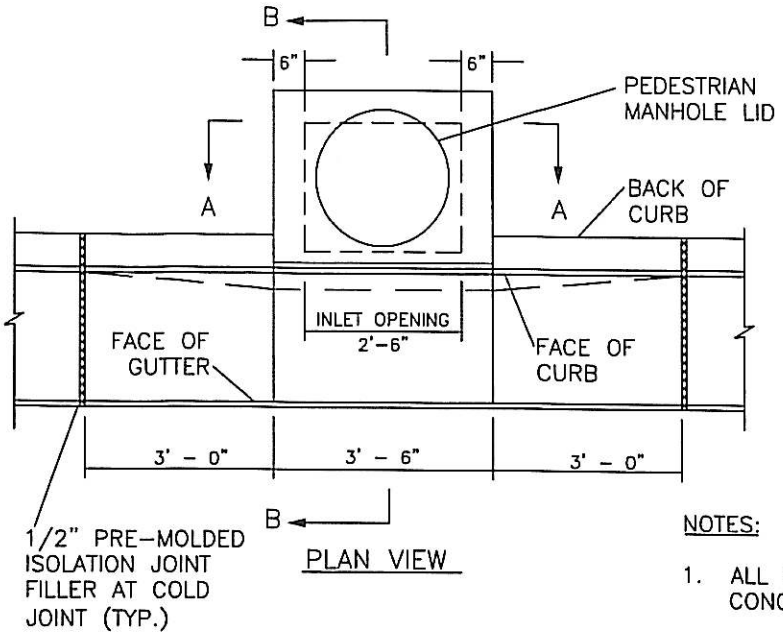

PLAN VIEW

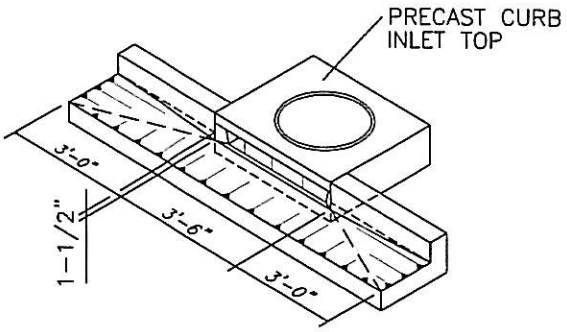

PERSPECTIVE VIEW SHOWING DEPRESSED GUTTER AT CURB INLET

NOTES:

1. ALL CONCRETE SHALL BE COMMERCIAL GRADE CONCRETE.
2. ALL FABRICATED METAL PARTS SHALL BE HOT-DIPPED GALVANIZED AFTER FABRICATION.
3. INLET BASE MAY BE CAST-IN-PLACE OR PRECAST. WHERE PRECAST INLET BASE IS USED AS AN ALTERNATE, A 4" COMPACTED LEVELING BED OF SAND OR 1/4"-0" CRUSHED AGGREGATE SHALL BE PROVIDED.

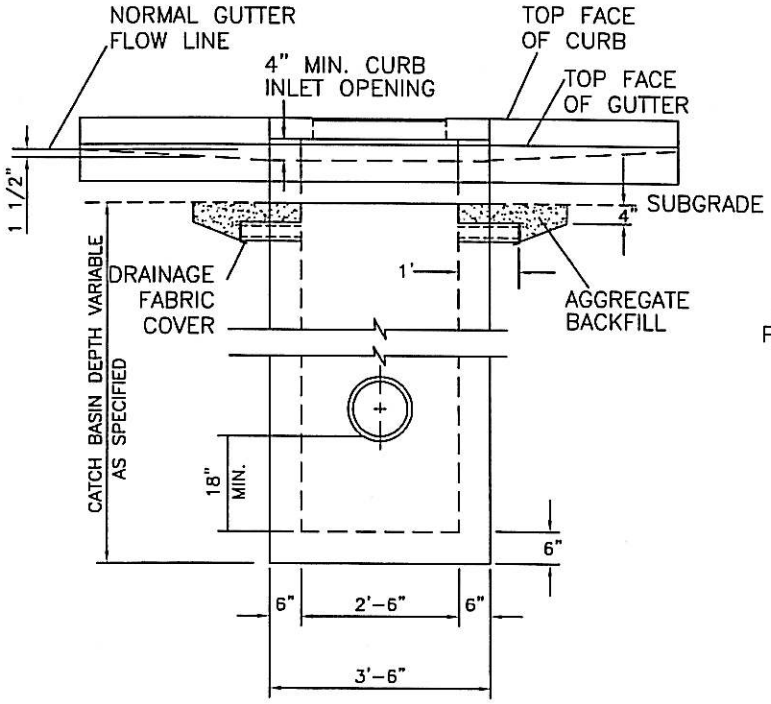

SECTION A-A

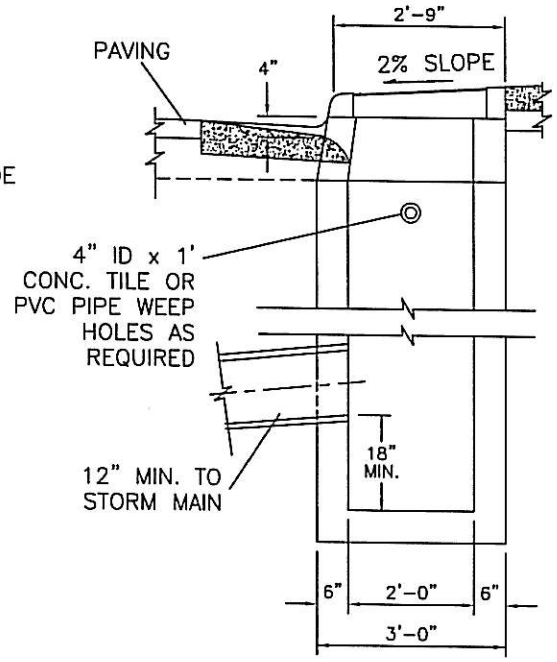

SECTION B-B

CITY OF LEBANON
It's easier from here.

CITY of LEBANON SUPPLEMENTAL DRAWING

APPROVED

CITY ENGINEER

MODIFIED TYPE CG-3 INLET

DATE: Jan. 2009

DRAWING NO: 00400-03